GlobalMed

Transportable Exam Station Quick Start Guide

1. Power and Charging

The Main power source for the Transportable Exam Station (TES) are the batteries in the built in Tablet. If the tablet is on It will give power to the devices and Ports

The power bank that is connected to the TES is both charging the tablet batteries and receiving the charge from the TES Charging Assembly.

1.1 Charging System Operation

The Power Banks and Internal Batteries are charged by connecting the **TES Charging Assembly** and plugging it into the wall electrical outlet.

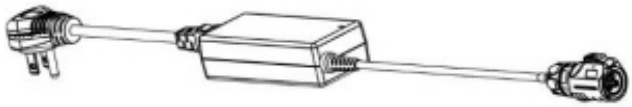

TES Charging Assembly

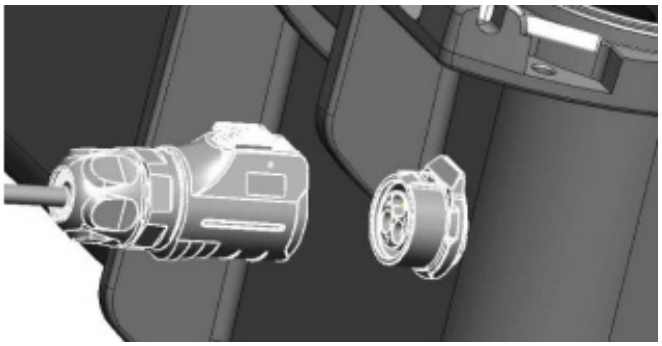

One Power Bank must always be connected to the TES. Power Banks provide power to the tablet internal batteries. The Power Bank will discharge before the internal batteries.

When the first Power Bank is depleted, the second Power Bank should be connected to provide addition power.

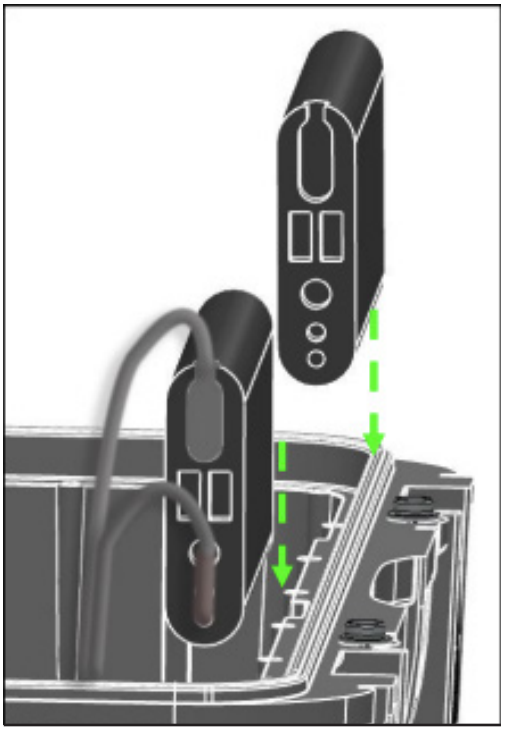

© 2002 - 2026 GlobalMed Holdings, LLC.

2. Front View Components

To open the TES Pull down on the grey section of each Powerclaw latch while simultaneously lifting up from the bottom and pulling out. Then lift up the upper lid until completely upright.

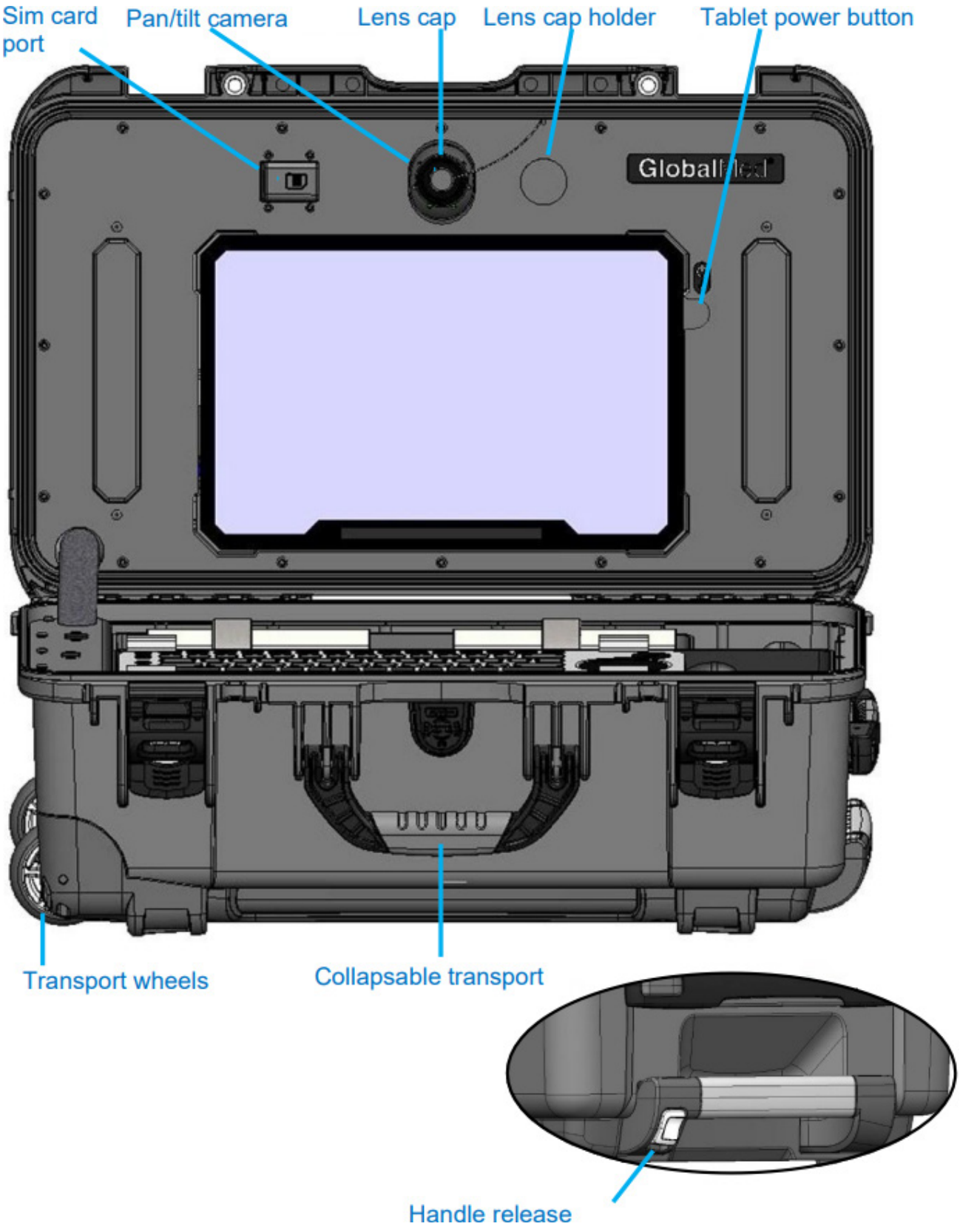

© 2002 - 2026 GlobalMed Holdings, LLC.

3. Device & Trays

Both the Key Board Tray #8, and the TotalVitals Tray #17, can be lifted out of the TES exposing the devices underneath.

The Key Board Tray #8 is designed to fit onto the handle that slides out of the TES.

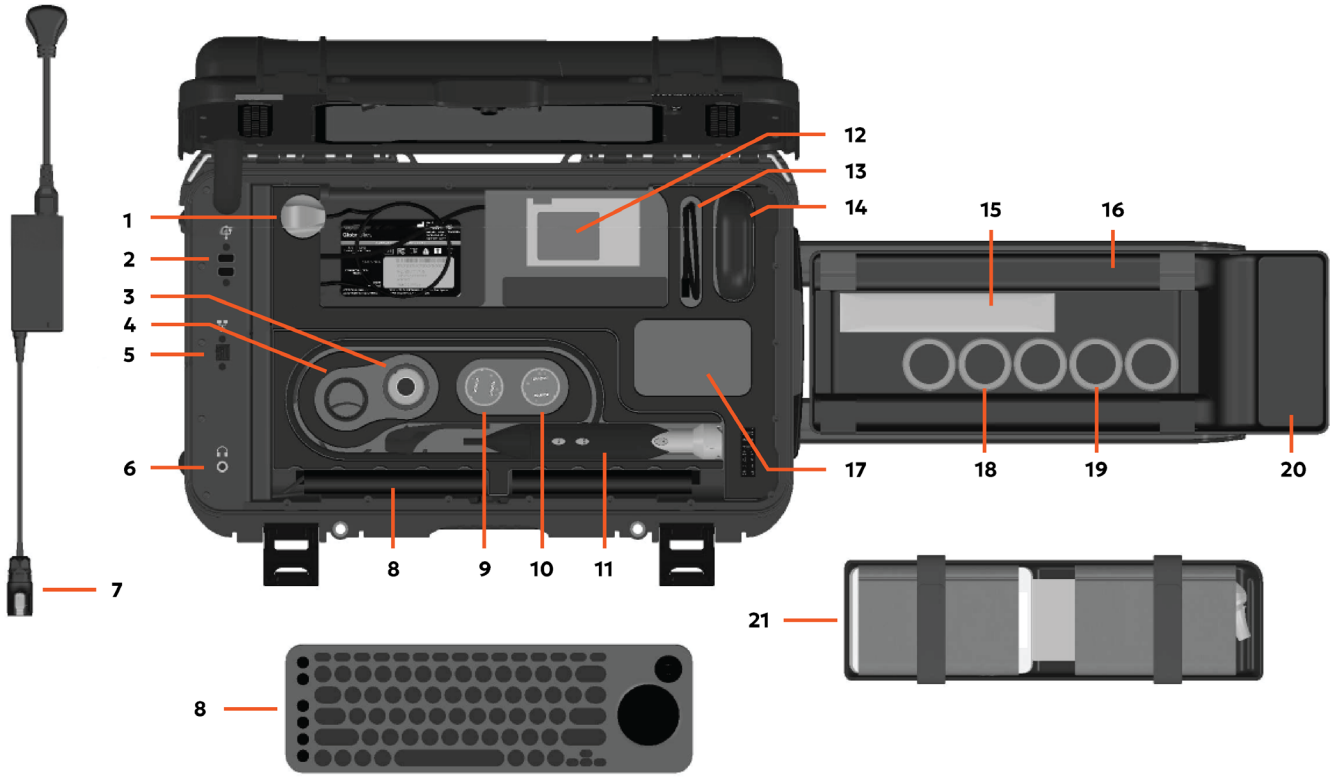

TES with TotalExam® 3.2 Device Locations

1. USB Digital Stethoscope
2. USB Ports (x2)
3. Polarizing Hood
4. Derm Hood
5. Ethernet Port
6. Audio Port
7. TES Charging Assembly
8. Keyboard
9. Camera Head
10. Otoscope Head
11. TotalExam® 3.2
12. TotalECG® Kit
13. Wireless Speaker Charging Cable
14. Wireless Speaker
15. 6” Tongue Depressors (x5)
16. Consumables / Keyboard Tray
17. Audio Accessories
    - In-Ear Headphones
    - USB to 3.5 mm Audio Jack
    - 3.5mm Male to Female Ext. Cable
18. Lens Wipes (x5)
19. One Touch Derm Collars (x5)
20. AC Power Adapter
21. TotalVitals® Tray
    - TotalVitals® Monitor
    - Blood Pressure Cuffs (M & L)
    - Tympanic Thermometer
    - Thermometer Filters

© 2002 - 2026 GlobalMed Holdings, LLC.